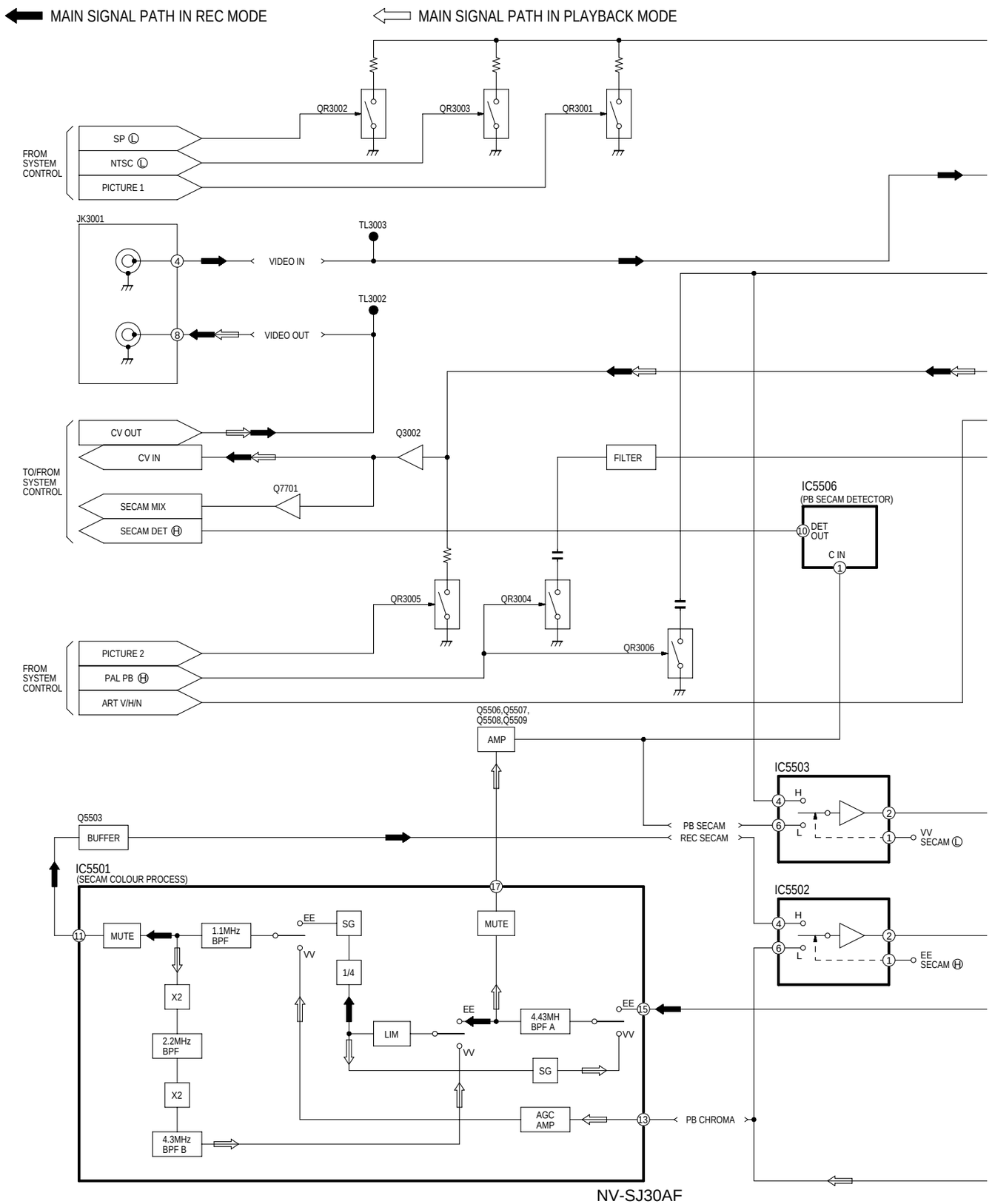

NV-SJ30AF
LUMINANCE & CHROMINANCE BLOCK DIAGRAM